SERIES E93 FLUSH GRID WITHOUT EDGE TAB

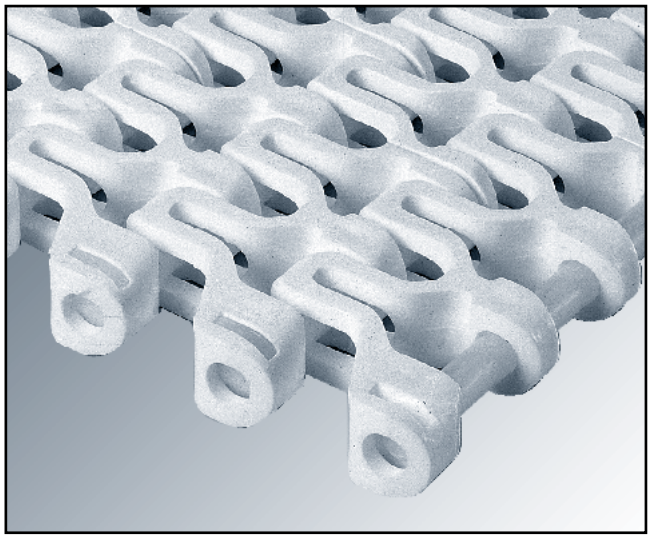

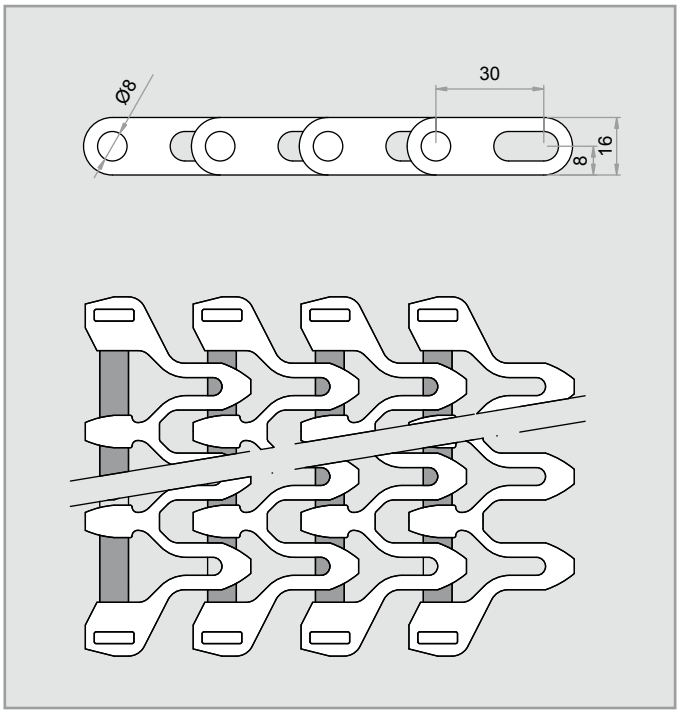

This conveyor belt has Flush Grid geometry, with a 47% open area, and smooth and rounded edges, which provides an excellent drainage, a very easy cleaning, good sliding properties, as well as very low maintenance costs.

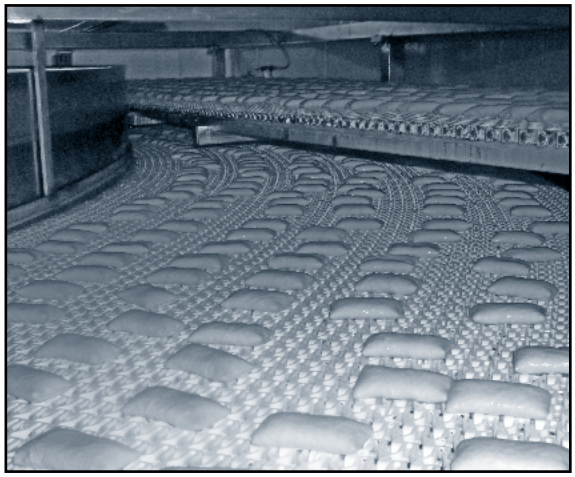

Pitch	30 mm
Surface	Flush Grid without edge tab
Open area	47 %
Maximum opening (approx.)	[22 x 5] mm
Thickness	16 mm
Drive system	Hinge
Belt width	Multiples of 25 mm
Turn radius for curves	2.2 times the belt width
Rod diameter	Ø 8 mm
Retention system	Clip

Material of the belt	Material of the rod	Belt strength		Temperature range (ºC)	Belt weight (kg/m²)	Available colours in stock
		Straight (kg/m)	Curved (kg)			
PP - Polypropylene	AC - Polyacetal	2,400	170	+1 to +90	7.14	[W] - [G]
PE - Polyethylene		1,520	100	-50 to +65	7.39	[N[
AC - Polyacetal		3,800	170	-40 to +90	9.80	[B] - [N]

Colours: [W] White - [G] Grey - [B] Blue - [N] Natural - [O] Black. // The materials and colours that are normally in stock are those above indicated. In special cases in which it is needed a belt in a material or colour different from those above mentioned, you should ask directly to EUROBELT.

ACCESSORIES [SPROCKETS]

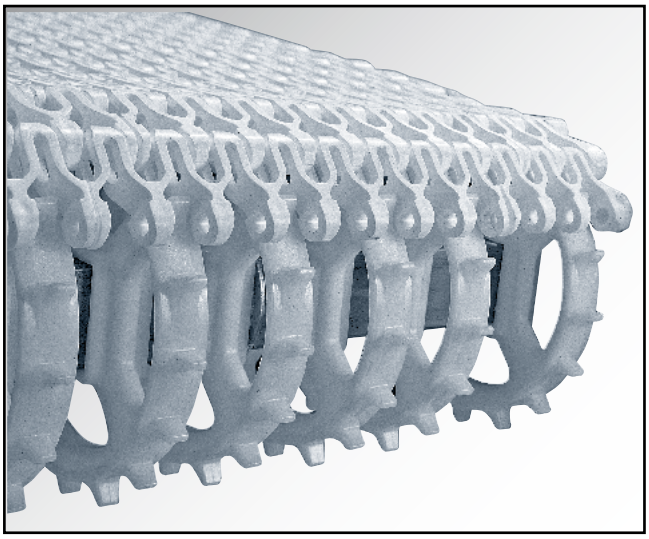

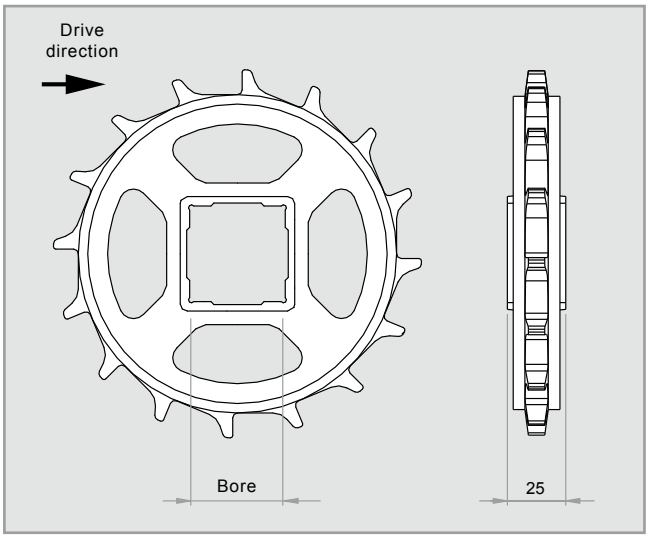

Nº of teeth T	Pitch diameter	Bore for square shaft		Hub width	Materials
		mm	inch		
11	106.5	40	1,5"	25	Polypropylene
16	153.5	40 60	1,5"	25	Polyacetal
20	191.5	40 60	1,5"	25	Stainless steel

SPROCKETS FOR SQUARE SHAFT

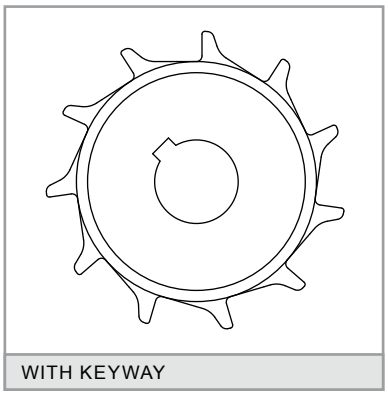

WITH KEYWAY

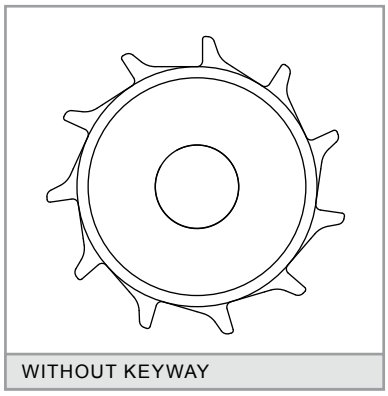

WITHOUT KEYWAY

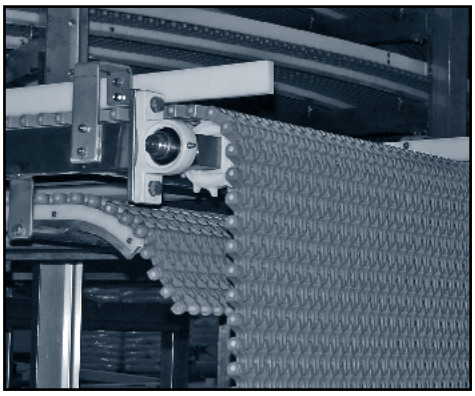

We have plastic sprockets for round shaft with and without keyway. We also have sprockets to be used with motor drum in applications needing a special cleaning or in conveyors in which it is not possible to place the motor in the outside due to problems of space or safety.

ACCESSORIES [RETAINING RINGS]

INSTALLATION

These rings are placed at every side of the central sprocket to fasten it to the shaft in order to avoid any lateral movements of the belt.

They are manufactured in AISI 316 stainless steel and they are fixed by means of a set screw stuffed in the ring itself.

One sprocket, duly fixed with 2 retaining rings, should be put in the centre. Then you should place the same quantity of sprockets at every side of the central one but without any fixing, as they will absorb the possible belt expansions and contractions.

The same procedure should be carried out in both shafts.

Bore for square shaft	Screws
40	M 6 x 6
60	M 6 x 6

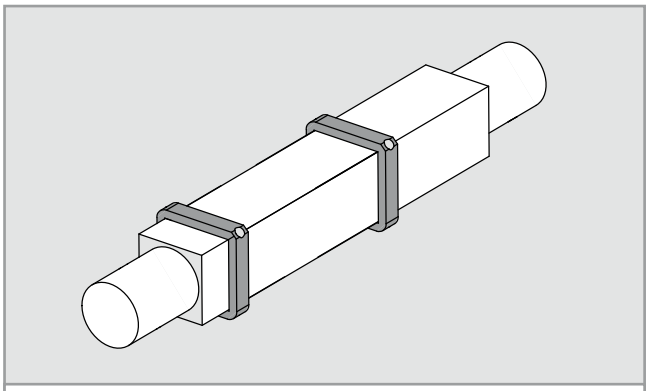

RETAINING RINGS

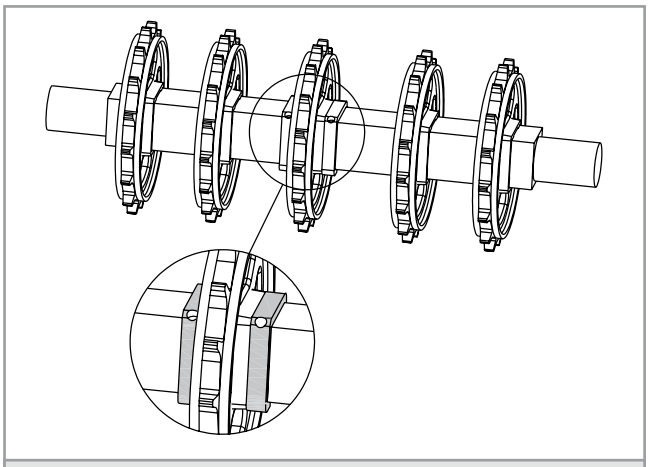

CENTRAL SPROCKET

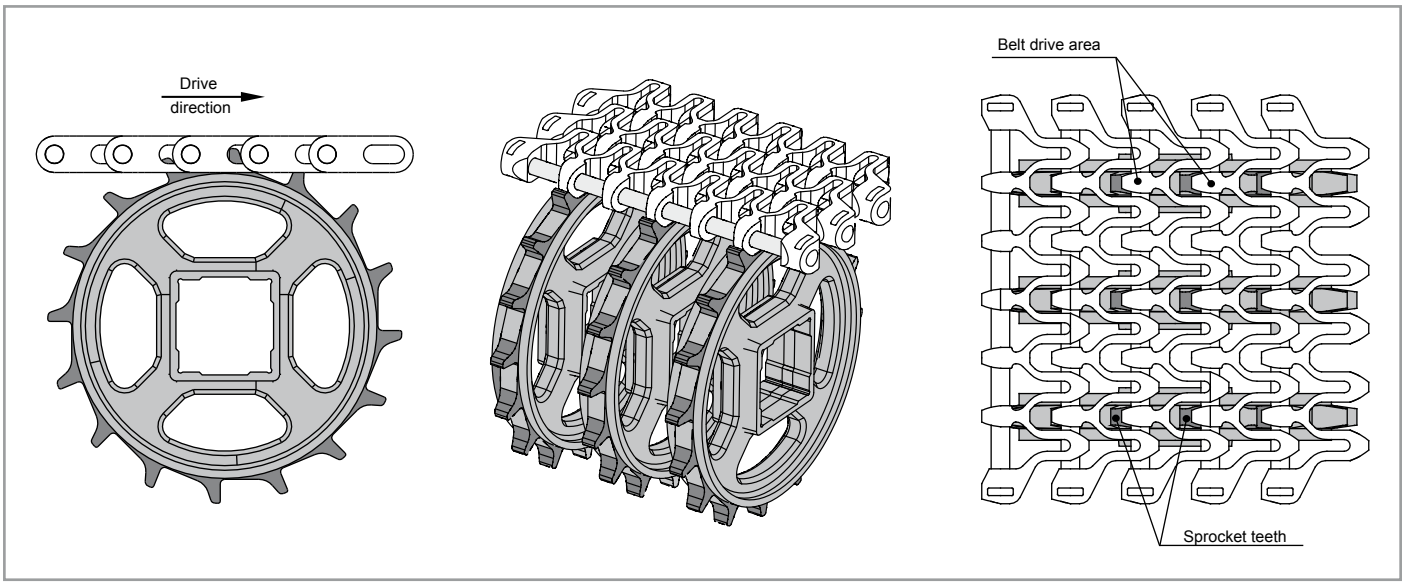

ACCESSORIES [FLIGHTS]

The flights are plastic accessories to be inserted across the belt. They are used to push the product in ascent, descent or accompaniment applications, avoiding that it slips along the belt.

Its non-stick side has ribs that project over the surface to prevent the product from sticking.

Their edges are completely rounded to avoid any damage of the product.

They can be used both in right and in curve sections.

It is possible to cut down the standard height for special applications.

STRAIGHT FLIGHT [STREAMLINE + NO CLING]

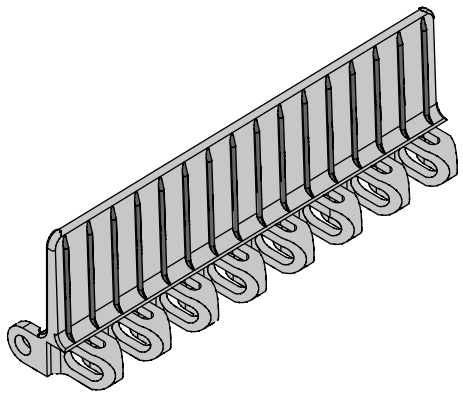

NO CLING FACE

Height (h)	25 mm 50 mm
Materials	Polypropylene Polyethylene Polyacetal
Indent	37.5 mm 62.5 mm 87.5 mm

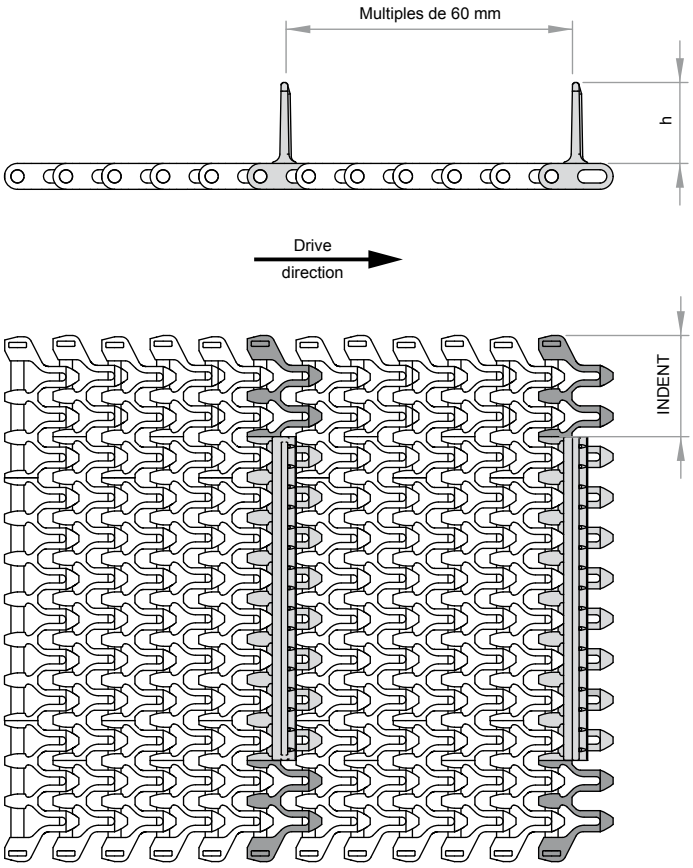

CONSTRUCTION OF BELT WITH FLIGHTS

ACCESSORIES [HOLD-DOWN PROFILES]

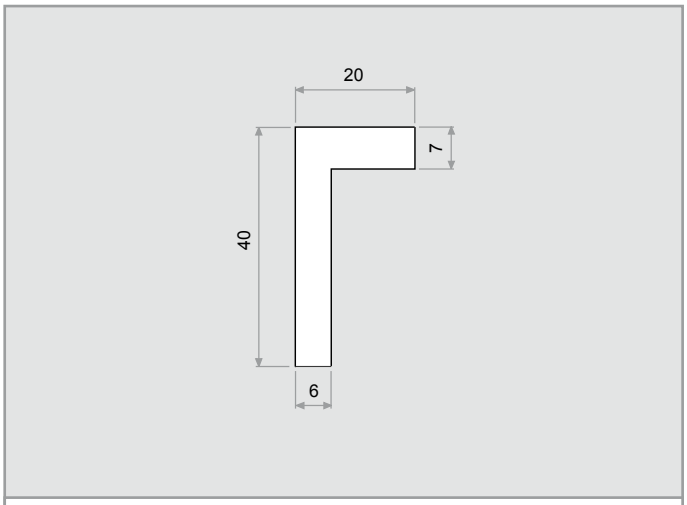

PROFILES IN L

To make the fastening and the support of the belt, EUROBELT has designed two types of hold-down profiles with different geometries, but with the same uses and services.

These profiles, with a low coefficient of friction, are placed between the belt and the structure of the conveyor, reducing the wear of the surfaces in contact, which contributes to prolong the life of the belt.

EUROBELT offers all the hold-down profiles in special polyethylenes with very good sliding properties and an excellent resistance to impact.

	Dimensions	Materials
Profiles in L	40 x 20 x 2.000	Polyethylene
Profiles in U	20 x 14 x 2.000	

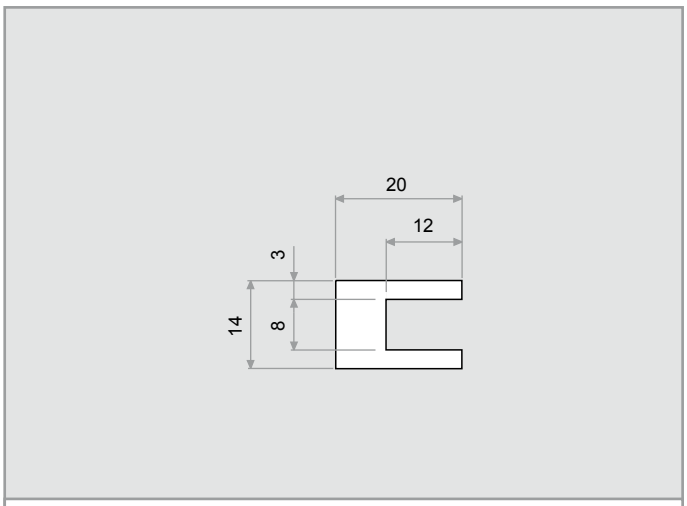

PROFILES IN U

The hold-down profiles must always be placed in all turns to fasten the belt. This fastening will be carried out in different ways depending on the type to be used:

BELT WITHOUT EDGE TAB

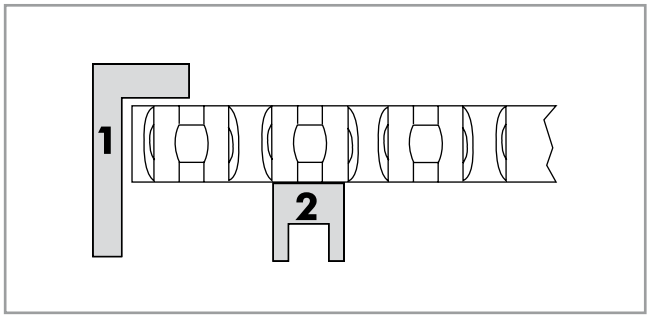

The fastening will be made above the upper side of the belt.

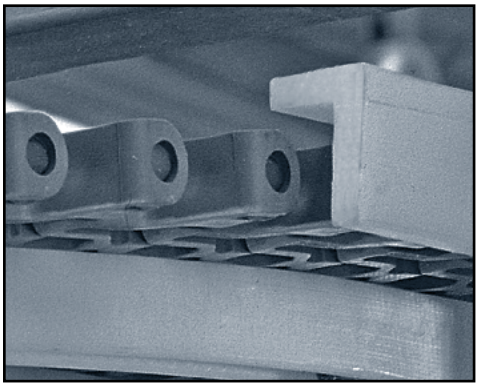

BELT WITH EDGE TAB

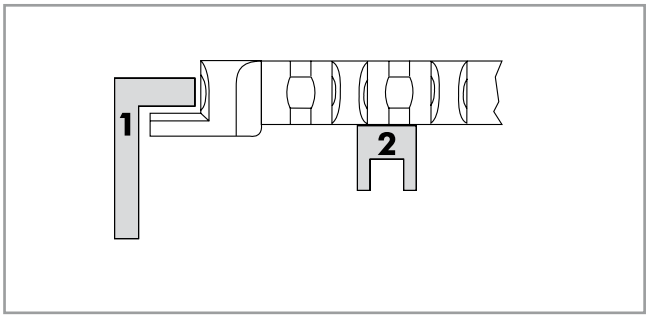

The fastening will be made over the tab. Thus, the carry way remains free of any interference.

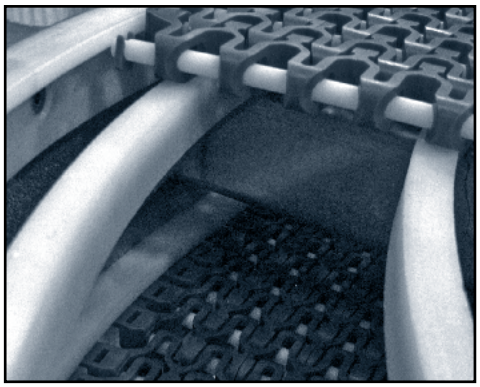

The hold-down profiles must not be in contact with the belt (see the pictures below):

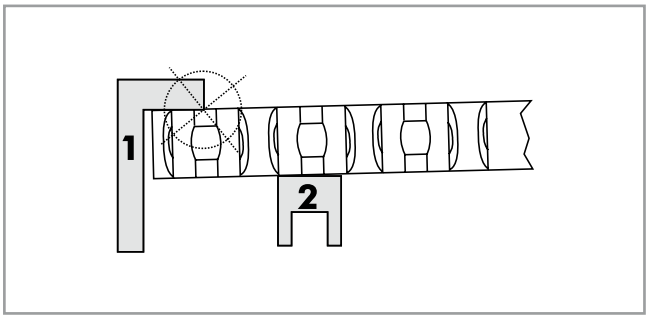

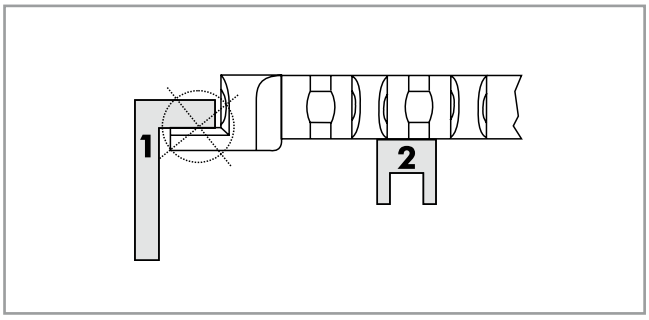

In cases in which there is going to be some manipulation on the belt, the lateral edges should be covered with a protection of 20 mm approximately, as a safety measure.

CONSTRUCTION DATA [CONVEYOR]

ELEVATING CONVEYOR WITH FLIGHTS

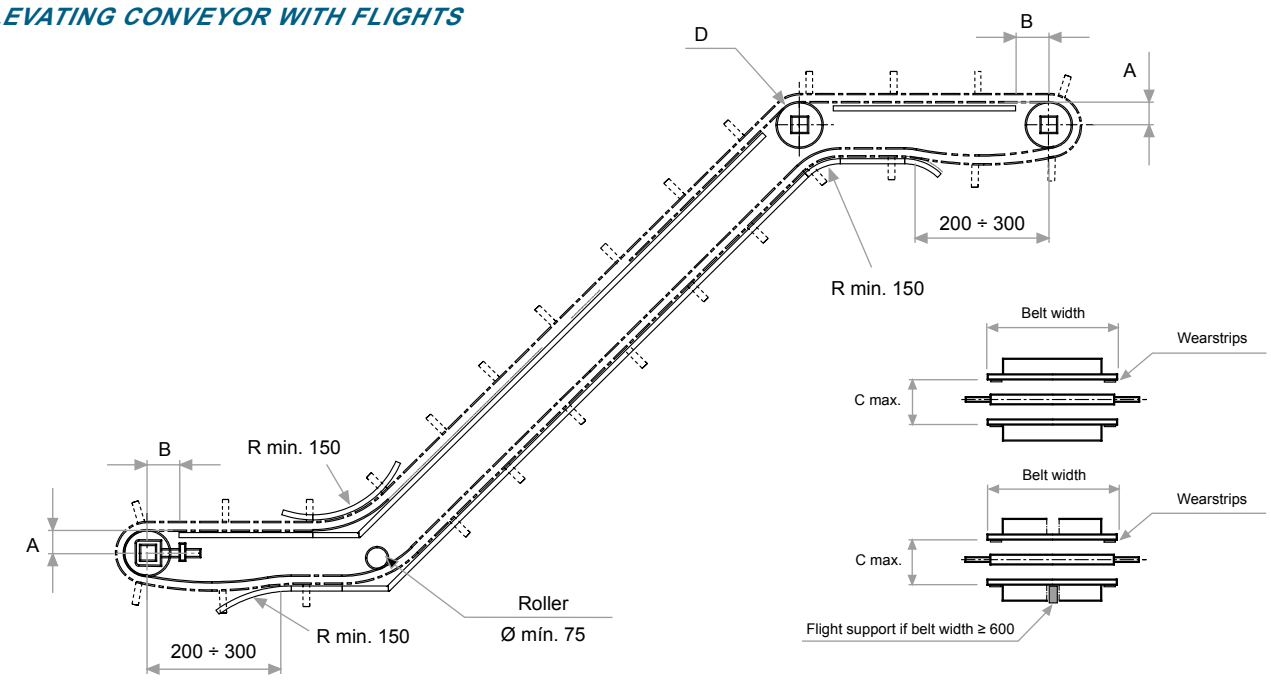

HORIZONTAL CONVEYOR

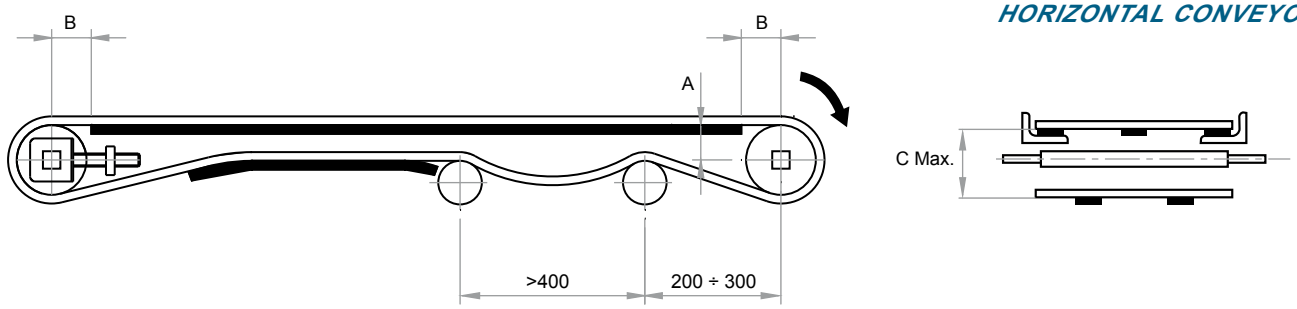

[A] Distance between the sliding surface of the belt and the centre of the shaft.

[B] Distance between the vertical of the shaft and the beginning of the sliding surface.

[C] Distance between the sliding surface of the belt and the support of the return way.

[D] If sprockets are used in the inflexion shaft, do not retain the central one.

[R] This radius must be as big as allowed by the application in order to minimize the wear (min. 150 mm).

In the construction of conveyors, the distances appearing in the chart below must be respected according to the belt Series and the size of the sprockets.

Nº of teeth T	Ø Pitch	A	B max.	C max.
11	106.5	44	50	115
16	153.5	69	65	160
20	191.5	87	75	200

CONSTRUCTION DATA [RADIAL APLICATIONS]

Before designing a radial conveying system consisting of a curve of 360º, two opposite curves in "S". or circuits without return, etc.. the next conditions must be taken into account:

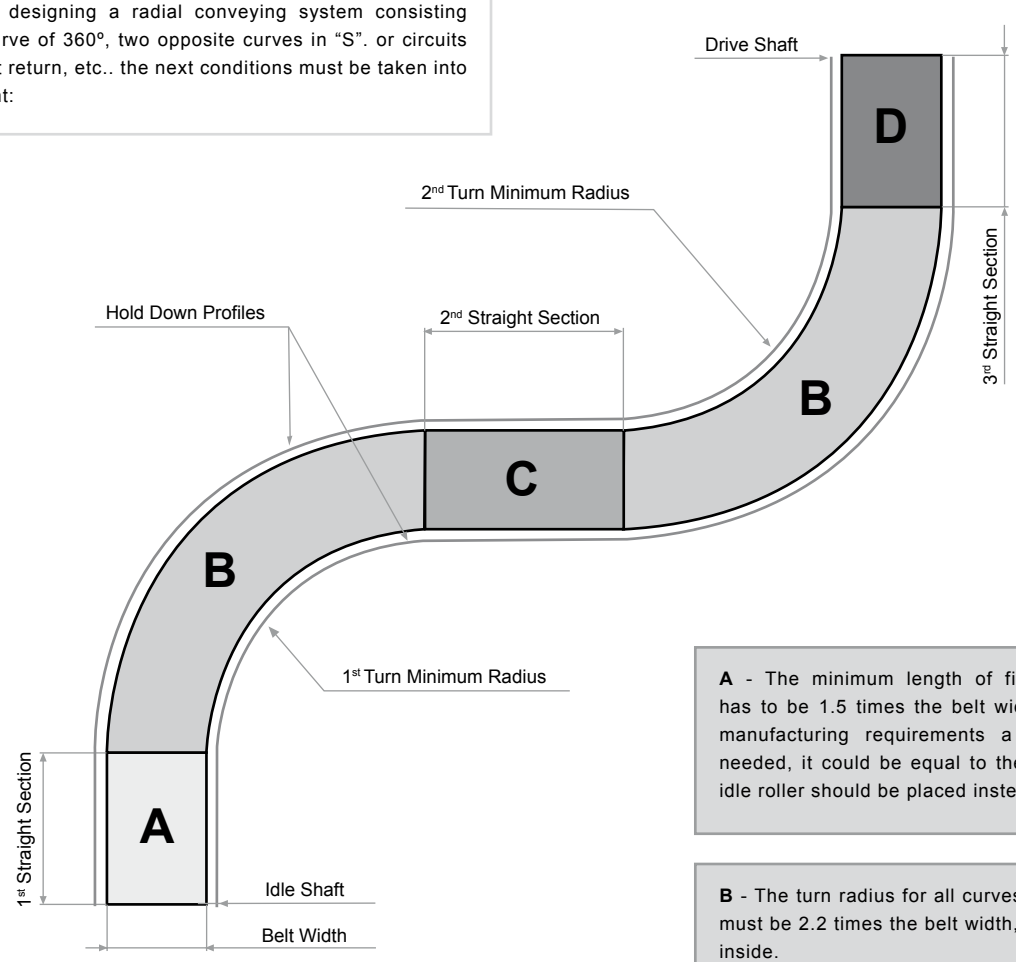

A - The minimum length of first straight section has to be 1.5 times the belt width. When owing to manufacturing requirements a smaller length is needed, it could be equal to the belt width, but an idle roller should be placed instead of the sprockets.

B - The turn radius for all curves made in Series 93 must be 2.2 times the belt width, measured from the inside.

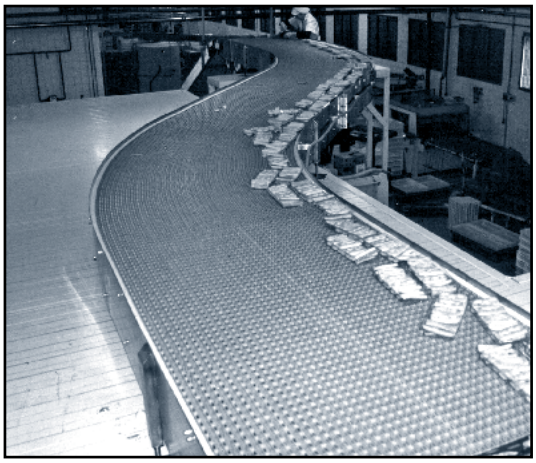

C - When two consecutive turns are made in opposite directions, the straight section between both of them must be 2 times the belt width in order to avoid wears in lateral fastenings, as well as high tensions in the belt. If two turns are made in the same direction, a minimum straight distance between them will not be required.

D - The minimum length of the last straight section, near the drive shaft, should be at least 1.5 times the belt width, in order to avoid unnecessary wear in sprockets and problems of alignment.

The total belt length will always be calculated from the outside perimeter of the curve sections.

CONSTRUCTION DATA [SPIRAL]

SERIES E93 can also be used for applications in spiral conveying systems. Its design of flat and rounded edges reduces considerably frictions between the inner curved radius and the drum, getting a smooth power transference from the central drum to the belt, having as a result a saving in energy costs.

Thanks to its design and its technical characteristics, EUROBELT SERIES E93 can be used to make any kind of configuration, giving the appropriate solution to many of your conveying problems.

Some of its main applications are:

- Repose and fermentation belts for bakery.

- Elevating and descending conveyors with minimum inclination.

- Cooling and/or freezing belts, as due to the 47% open area you can obtain a great energy transference.

- Special vertical accumulation tables, with a big capacity of storage in a reduced space, thanks to the spiral configuration and to the materials used by EUROBELT.

In the pictures below, we can see different possible configurations: one only bidirectional spiral (elevating, descending or bidirectional, picture 1). and two spirals (one of them elevating and the other one descending, or bidirectionals, picture 2):

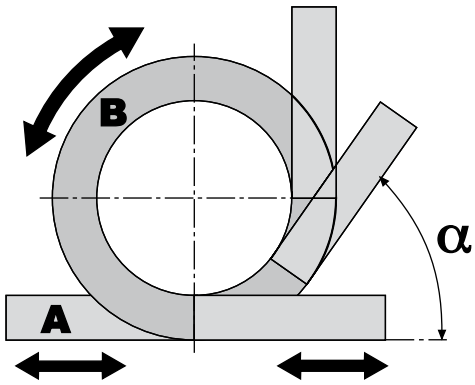

PICTURE 1

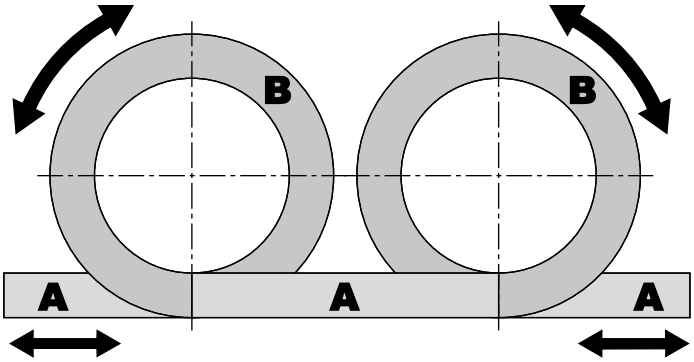

PICTURE 1

A - Like in the radial applications, the minimum length of the infeed section as well as that of the outfeed one, must be 1.5 times the belt width.

B - The minimum turn radius must be 2.2 times the belt width. Hold-down profiles should be placed all along the spiral in order to make the fastening of the belt.

TABLE OF SPROCKETS AND WEARSTRIPS

Belt nominal width (mm)		Minimum quantity of sprockets per shaft	Minimum quantity of wearstrips	
			Transport way	Return way
100	150	1	2	2
175	300	3	2	2
325	500	5	3	3
525	700	7	4	3
725	900	9	5	4
925	1,100	11	6	4
1,125	1,300	13	6	5
1,325	1,500	15	7	6
1,525	1,700	17	8	6
1,725	1,900	19	9	7
1,925	2,100	21	10	8
2,125	2,300	23	11	8
2,325	2,500	25	11	9
2,525	2,700	27	12	10

To calculate the necessary minimum quantity of sprockets for the drive shaft as well as for the idle one, the next formula has been used:

$$\text{Minimum quantity} = \frac{\text{Belt width (mm)}}{100 \text{ mm}}$$

This amount must always be odd.

To calculate the quantity of supports, the weight of the product to be transported must be taken into account.

The distance between supports should not exceed 230 mm in the transport way or 300 mm in the return way.